BANK ĊENTRALI TA' MALTA
EUROSISTEMA
CENTRAL BANK OF MALTA

ESTIMATING FISCAL MULTIPLIERS FROM A STRUCTURAL MODEL: AN APPLICATION OF THE FISCAL EXTENSION TO MEDSEA

Article published in the Quarterly Review 2018:2, pp. 39-45

BOX 1: ESTIMATING FISCAL MULTIPLIERS FROM A STRUCTURAL MODEL: AN APPLICATION OF THE FISCAL EXTENSION TO MEDSEA[1]

Following the Great Recession of 2009, governments embarked on ambitious fiscal expansionary programmes designed to sustain their respective economies in the midst of the deepest economic crisis since the Great Depression. At the same time, governments needed to formulate exit strategies aimed at guaranteeing fiscal sustainability. This dilemma led to two fundamentally linked policy questions. First, which fiscal instruments are likely to stimulate the economy the most for a given impact on government debt? Second, should fiscal restructuring be achieved through cuts in government expenditure or taxes' hikes and what are the macroeconomic and welfare implications of such strategies?

Dynamic stochastic general equilibrium (DSGE) models are regarded as reliable tools that can provide valuable insights to policymakers with regards to evaluating fiscal policy alternatives. In 2016, the Central Bank of Malta published MEDSEA, a new DSGE model that has been designed to account for the Maltese economy's specific characteristics, including the small and open nature of its economy and its membership in a monetary union.[2] However, the original version of the model had a stylised treatment of fiscal policy, limiting its use to answer the two policy questions mentioned above. To this end, MEDSEA has been recently extended by introducing a detailed fiscal block.

A brief overview of the model

The fiscal version of MEDSEA contains new household and government sector blocks (see Chart 1). The household block was extended to allow for some financial market imperfections allowing the model to capture the negative wealth effects associated with fiscal consolidation. It is assumed that the economy is populated by two types of households: optimising households that have unrestricted access to financial markets and credit constrained households that cannot resort to financial markets to intertemporally smooth their consumption. Both types of households derive utility from a bundle of private consumption and public goods. This modelling strategy ensures that the model is able to account for the trade-off that exists between welfare-enhancing public goods and the misallocation of labour and goods induced by government expenditure shocks.

The government finances its expenditure by levying four types of taxes: a tax on labour, one on capital and dividends, one on consumption and a lump sum tax, as well as by issuing government bonds on the local market. The first three types of taxes are distortionary in nature, implying that Ricardian equivalence does not necessarily hold. On the expenditure side, the model distinguishes between government consumption, investment and transfers to households. The former is in turn divided into government purchases of goods and services and the public sector wage bill. Owing to its final good production structure, the model allows to pin down the different degrees of import content that characterise government expenditure on goods and services for consumption purposes

[1] Prepared by Noel Rapa. The author is a Senior Research Economist within the Research Department of the Central Bank of Malta. The views expressed in this Box are the author's own and do not necessarily represent the views of the Bank. The Box builds on the results presented in Rapa, N. (2017). "Estimates of Fiscal Multipliers using MEDSEA", *Working Paper* 04/2017, Central Bank of Malta.

[2] Rapa, N. (2016). "MEDSEA: A small open economy DSGE model for Malta", *Working Paper* 05/2016, Central Bank of Malta.

Chart 1
SCHEMATIC REPRESENTATION OF MEDSEA

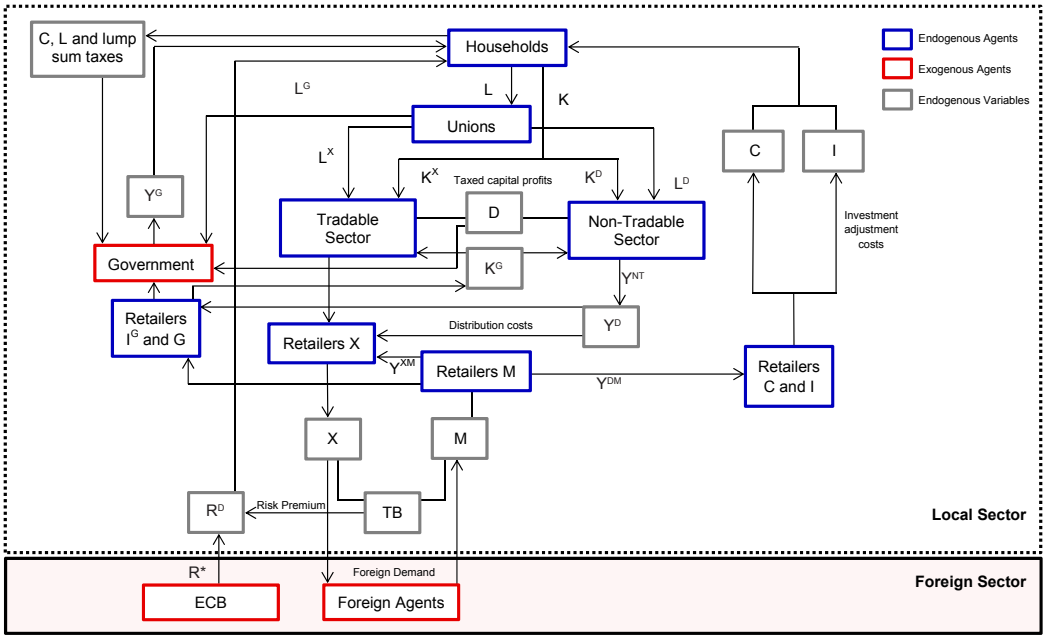

and public investment. In light of the relatively open nature of the Maltese economy, this feature is believed to be very important so as to correctly measure the impact of changes in different fiscal instruments.

Public investment is modelled in a time-to-build setup designed to capture the fact that most capital projects are subject to implementation delays often dictated by long processes of planning and construction stages. These delays are important as they may lead to positive wealth effects that dominate the negative wealth effects that are usually associated with government purchases, leading to different private consumption, investment, work effort and output dynamics in the short-run following shocks to government investment.

The model is closed through a fiscal rule which is designed to bring the government debt-to-GDP ratio smoothly to a target. In order to stabilise its debt-to-GDP ratio, the rule allows the government to choose a unique fiscal instrument among four tax instruments and four expenditure items.

The calibration of the core part of the model is in line with the original version of MEDSEA. Parameters related to fiscal ratios were calibrated using Quarterly Accounts of General Government and National Accounts data. On the revenue side, tax rates are calibrated in line with effective tax rates. On the expenditure side, government purchases, transfers to households, government investment and the public wage bill were all calibrated as a ratio to GDP. Most parameters that govern the dynamics of the model are calibrated consistently with existing DSGE literature on the euro area and Malta as well as using some microdata

studies specific to the Maltese economy.[3,4] Parameters specific to the fiscal block are calibrated according to a number of studies in the literature.[5]

Fiscal multipliers

This section discusses estimates of both short and long-run fiscal multipliers derived from the updated version of MEDSEA. All multipliers are estimated by simulating either a temporary or permanent contractionary fiscal shock to one specific instrument, normalised to 1% of GDP. All remaining fiscal instruments are held constant for the first two years. Thereafter, one fiscal instrument is allowed to adjust in order to stabilise the public debt to GDP ratio at its target long-run value. In the case of long-run fiscal multipliers, results are dependent on the instrument used to stabilise the government debt ratio. Long-run simulations are conducted using two different adjustment instruments, a lump-sum (or non-distortionary) tax and income tax rates (which create distortions in the labour market). Short and long-run multiplier results are provided for two expenditure items – government consumption (disaggregated into government purchases and wage bill) and public investment – and three taxation shocks – income tax, consumption tax and capital tax. All simulations are performed under perfect foresight, thus assuming that fiscal paths are fully anticipated by agents, ruling out any uncertainty relating to the path of the fiscal variables.

Short-run multipliers

Table 1 shows short-run multiplier results for all temporary shocks. All temporary multipliers are less than one in absolute terms throughout the two-year period under consideration. In the case of government expenditure shocks, this result is driven by the positive wealth effects associated with a reduction in public expenditure, which in turn creates a crowding-in effect of the private sector, partially offsetting the reduction in public expenditure. A fall in government consumption leads to a fall in employment demand and a reduction in real wages.[6] This creates a negative income effect which prompts credit

Table 1
SHORT-RUN FISCAL OUTPUT MULTIPLIERS
% deviation from initial steady state

	Year 1	Year 2
Government consumption	-0.53	-0.19
Government purchases	-0.31	-0.20
Government wage bill	-0.61	-0.18
Government investment	-0.57	-0.96
Labour tax	-0.17	-0.29
Consumption tax	-0.25	-0.22
Capital tax	-0.03	-0.08

Source: Author's calculations.

[3] See for instance Micallef, B. (2013), "Measuring the effects of structural reforms in Malta: an analysis using the EAGLE model", WP/01/2013, Central Bank of Malta.
[4] See Central Bank of Malta Annual Report (2014).
[5] See for instance Forni et al. (2010), "The macroeconomics of fiscal consolidations in the euro are countries," *Journal of Economic Dynamics and Control*, 34, pp. 1791-1812. Ercolani and Valle e Azevedo, (2014), "The effects of public spending externalities". Journal of Economic Dynamics and Control, 46, 173-199. Coenen et al. (2013), "Gauging the effects of fiscal stimulus packages in the euro area", *Journal of Economic Dynamics and Control*, 32, pp. 367-386.
[6] The shock to government consumption is conducted as a shock to government purchases and to the government wage bill. The shocks are calibrated so that these items retain their original share in total government consumption.

constrained households (which cannot intertemporally smoothen consumption) to reduce consumption in the short-run. On the other hand, Ricardian households are affected by a positive wealth effect driven by the expected fall in future taxes, leading to a slight increase in their consumption, thereby partially offsetting the fall in private consumption of non-Ricardian households. The fall in real wages translates into a reduction in real marginal costs, which improves the country's external competitiveness.

The detailed structure of the model allows a disaggregation of the effects of a government consumption shock into those pertaining to government purchases of goods and services and those to the government wage bill. The effects of the two shocks differ both in terms of magnitude and their propagation to the rest of the economy. The reduction in government purchases creates a smaller but more persistent fall in output than an equivalent drop in the government wage bill. This is mainly driven by two factors. First, government purchases contain a substantial proportion of import content. Secondly, a reduction in government employment directly releases labour effort which becomes employable by the more productive private sector. The lower demand for labour effort by the public sector leads to a fall in real wages, which transmits to the rest of the economy. This results in an improvement in external competitiveness and an increased demand for Maltese exports. Lower real wages prompt private firms to increase employment demand. Indeed, contrary to the case of a shock to government expenditure, a government wage bill shock is accompanied by a rise in private sector output.

The short-run multipliers pertaining to government consumption shocks are smaller than those reported in existing literature for Malta.[7] Previous studies based on either structural or semi-structural models have indicated that following a fall in government consumption equivalent to 1.0% of GDP, Maltese output is expected to fall between 0.7% and 0.8% in the first year, compared to a fall of 0.5% projected in this analysis. These differences are due to the more refined treatment of import content of the Maltese GDP components in MEDSEA compared with the other models.

Compared with a government consumption shock, a decline in public investment creates a stronger and more persistent effect on total output. A decline in government investment reduces government capital, thus lowering the marginal productivity of the other input factors. This crowds-out private labour and capital thereby creating additional supply responses that further contribute to the fall in GDP. Lower productivity also translates in negative wealth effects that drive private consumption down. Higher marginal costs lead to inflationary pressures and a subsequent deterioration in external competitiveness. These results suggest that fiscal consolidations based on reductions in government investment are in general more costly to the economy than those based on reduction in government consumption.

Results for tax multipliers are lower than those pertaining to government expenditure items, especially in the first year of simulation.[8] A rise in the labour tax rate reduces real after tax wages which in turn produces two distinct effects. First, a negative income effect leads to a

[7] See Borg et al. (2015), "Fiscal Multipliers in the Maltese Economy", *Quarterly Review*, 2014:4, pp. 59-68, Central Bank of Malta, for a comprehensive summary of fiscal multiplier literature for the Maltese economy.

[8] For a comparison of fiscal multiplier estimates across different models, see for instance Kilponen et al. (2015), "Comparing Fiscal Multipliers across Models and Countries in Europe", Working Paper 278, National Bank of Belgium.

reduction in the private consumption of both households. Secondly, the reduction in after tax real wages raises the marginal rate of substitution between consumption and leisure, driving households to reduce labour effort for a given pre-tax real wage. On the other hand, the reduction in aggregate demand reduces the demand for labour, but these effects are not enough to offset the fall in labour supply, prompting firms to raise gross real wages, which impinge negatively on external competitiveness. In view of wage and price rigidities, these effects are slow to materialise implying that unlike the effects of a fall in government consumption, those pertaining to a labour tax hike peak in the second year after the start of the simulation.

Following an increase in consumption taxes, gross inflation experiences a one-off increase. A reduction in the purchasing power of disposable income causes both types of households to reduce private consumption, leading to a reduction in private output and in the demand for factor inputs. As households reduce consumption, more resources are shifted towards private investment. Moreover, falling real wages cause a fall in economy-wide real marginal costs which lead to a gradual improvement in exports. Despite increases in private investment and exports, the overall impact on Maltese GDP remains negative throughout the first two years of the simulation, averaging around -0.2%.

Finally, a rise in capital income taxes creates a negative wealth effect as households anticipate lower returns from their capital holdings. This causes a somewhat contained reduction in the consumption of Ricardian households. Moreover, the reduction in after-tax return on capital leads firms to diversify away from capital and choose a more labour intensive capital-labour mix. Despite becoming relatively cheaper, labour effort does not increase in the economy, as reductions in aggregate demand weigh negatively on factor demands. Moreover, higher prices for investment start to raise the real marginal costs of intermediary firms leading to some inflationary pressures by the end of the simulation. This leads to a worsening of Malta's international competitiveness. All-in-all, by the second year after the start of the simulation, these effects reduce GDP by around 0.1%.

Long-run multipliers

Permanent fiscal scenarios refer to shocks that permanently alter the fiscal structure of the economy. Unlike temporary shocks, the results following permanent shocks are sensible to the fiscal instrument used to stabilise the government debt-to-GDP ratio. In this light, the first panel of Table 2 shows multiplier results consistent with fiscal adjustments carried out through lump-sum taxes, while the second panel is consistent with the (more plausible) case where fiscal sustainability is guaranteed through variations in the labour tax rate. In order to aid in the interpretation of these results as well as to provide insight on the fiscal space created for each shock, the last column in each panel shows the adjustment in government revenue required to stabilise the government debt-to-output ratio.[9] Apart from providing long-run multiplier results, this analysis allows one to show the extent to which both short- and long-run multipliers are affected by the instrument chosen by the government to finance its change in fiscal stance.

In general, short-run expenditure multipliers following permanent shocks are lower in absolute terms than those following temporary shocks. This effect is mainly driven by the

[9] This result is also useful to judge whether stability in the debt ratio is achieved through sensible changes in the fiscal instrument.

Table 2
SHORT-RUN FISCAL OUTPUT MULTIPLIERS
% deviation from baseline unless otherwise stated

	Adjusting lump sum taxes (non-distortionary)				Adjusting income taxes (distortionary)			
	Year 1	Year 2	LR	Adj.[1]	Year 1	Year 2	LR	Adj.[1]
Government consumption	-0.45	-0.11	0.06	-0.98	-0.42	-0.05	1.07	-1.25
Government purchases	-0.21	-0.14	-0.49	-1.23	-0.06	-0.03	0.48	-1.13
Government wage bill	-0.57	-0.10	0.33	-0.92	-0.53	-0.05	1.28	-1.26
Government Investment	-0.61	-0.98	-4.50	-1.76	-0.38	-0.83	-3.00	-1.85
Government Investment – delay	-0.06	-0.03	-4.49	-1.74	0.16	0.05	-3.00	-1.85
Labour tax	-0.29	-0.34	-0.84	-1.04	-	-	-	-
Consumption tax	-0.19	-0.19	-0.51	-1.15	-0.05	-0.10	0.35	-1.07
Capital tax	-0.13	-0.21	-1.13	-1.13	0.01	-0.12	-0.16	-1.08

[1] Adj shows the adjustment in percentage point deviations of the fiscal instrument used in the fiscal rule.

Source: Author's calculations.

stronger positive wealth effects associated with the permanent future tax cuts, creating a stronger crowding-in of private consumption and investment. On the contrary, tax multipliers (with the exception of consumption taxes) are larger in absolute terms when the shock is of permanent nature. All short-run multipliers are lower in absolute terms when the fiscal space created by the contractionary fiscal shocks is used to finance a cut in labour income taxes. This result is driven by the distortionary nature of labour income taxes which affects the expected leisure/work trade-off of households.

Long-run multipliers in case of lump-sum tax adjustment are in most cases larger in absolute terms than their short-term counterparts. The only exception is the long-run multiplier following a shock to government employment. In this case, the positive wealth effects and increased labour productivity caused by the permanent reduction in labour market distortions pushes the multiplier into positive region already by the third year of the simulation. Thus, the marginally positive long-run multiplier for a reduction in government consumption is wholly driven by the shock in the wage bill component of government consumption. All long-run multipliers are lower in absolute terms and in most cases even turn positive, in case the government stabilises its government debt-to-GDP ratio through labour income tax reductions. Reductions in labour income taxes reduce the tax wedge that exists between the gross real wage (which is the cost of labour faced by firms) and the net real wage (which is the return on household effort). This allows firms to reduce gross real wages leading to lower marginal costs and inflation, while at the same time raising net real wages thus creating a positive permanent income effect. For all shocks, with the exception of government investment and capital income tax shocks, these two permanent positive effects are enough to outweigh the negative effects associated with the permanent contractionary fiscal shocks.

Conclusion and policy recommendations

The estimates of fiscal multipliers presented in this Box lead to a number of robust conclusions in line with the literature. First, short-run multipliers are smaller than one irrespective of the fiscal instrument used. Reductions in government consumption and investment are

generally associated with larger short-run declines in output compared to increases in taxation. Finally, financing matters in the long run. Long-run multipliers are generally negative when the budgetary room following the fiscal tightening is used to lower non-distortionary taxes but can turn positive if the fiscal space is used to reduce distortionary taxation, such as households' labour income tax.

These findings provide a number of policy recommendations. First, in a recessionary environment, a strategy based on targeted fiscal assistance to firms or sectors in distress might be preferable to a broad-based fiscal stimulus, which would be leaked abroad given the high openness of the Maltese economy. Second, in a fiscal consolidation scenario, instead of a strategy based solely on expenditure cuts, the government should opt for a combination of tax and expenditure increases in an effort to reduce short term costs. As more fiscal space is eventually created, the strategy should shift to one primarily reliant on expenditure cuts, while at the same time using any extra fiscal space to reduce distortionary taxation. In light of its substantial long-run effects on potential output, government investment should be increased using any fiscal space created through the reduction in government consumption.